MASON INDUSTRIES, Inc.
Manufacturers of Vibration Control Products
350 Rabro Drive
Hauppauge, NY 11788
631/348-0282
FAX 631/348-0279
Info@Mason-Ind.com
2101 W. Crescent Ave., Suite D
Anaheim, CA 92801
714/535-2727
FAX 714/535-5738
Info@MasonAnaheim.com
www.Mason-Ind.com

JOB NAME _____
CUSTOMER _____
CUSTOMER P.O. _____
MASON M.I. _____
DWG. NO. _____

Z-1011

All-Directional Seismic Snubber Sizes 500-1250

Z-1011 500-thru 1250

NOTE: Upper and Lower Bracket Plates are identical

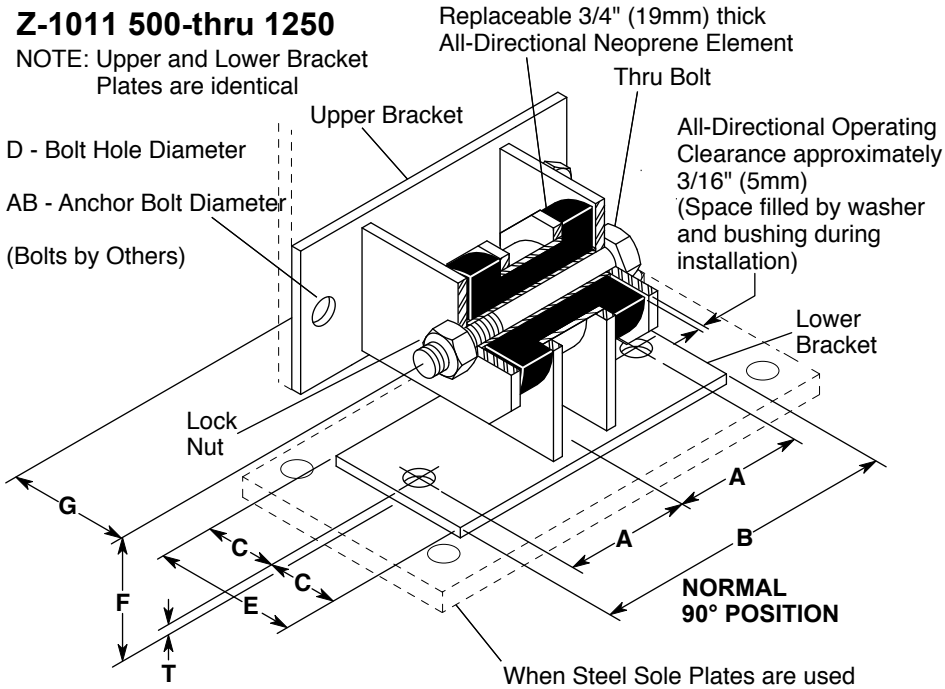

When Steel Sole Plates are used level and anchor Sole Plates properly to concrete. Snubber Base Plate may be bolted or welded to Sole Plate.

ALTERNATE 180° POSITION

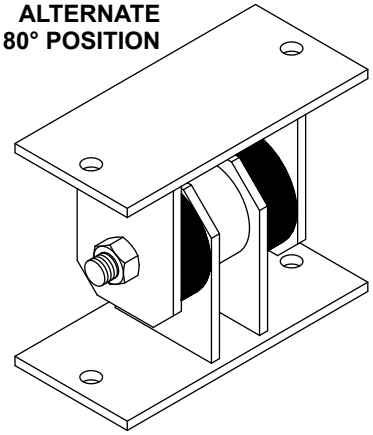

INSTALLATION INSTRUCTIONS:

1. Snubbers are inactive during normal operation and clearance must be maintained.
2. To maintain clearances around isolation bushing, unit is furnished with spacer washers and bushing.
   These are to remain in the unit during installation only.
3. If snubbers are installed on equipment such as blowers or pumps with flexible connections that move and remain in a different position during operation, final positioning and adjustment of snubbers must be made with equipment in operation.
4. Use shims at brackets as required so that units are installed without applying pressure on spacer washers or bushing.
5. After units are installed, remove spacer washers and bushing as follows:

a. Remove lock nut from thru-bolt and remove thru-bolt.
b. Remove anchor bolts from one bracket. If bracket was shimmed, note shim position.
c. Remove bracket and remove spacer washers and bushing.
d. Reinstall bracket and thru-bolt. If shims were used, shim as before.

TYPE Z-1011 LOAD RATINGS and DIMENSIONS

	Size	Load Rating	A	AB	B	C	D	E	F	G	T
U.S.A. or British (lbs. & inches)	500	500	3 1/8	3/8	7 1/2	1 1/2	1/2	3	2 1/2	3	1/4
	1250	1250	3 3/8	1/2	8 1/4	3	5/8	6	4 3/8	4 3/8	3/8
Metric (kgs. & mm)	500	227	79	10	191	38	13	76	64	76	6
	1250	568	86	13	210	76	16	152	111	111	10

MASON INDUSTRIES, Inc.
Manufacturers of Vibration Control Products
350 Rabro Drive
Hauppauge, NY 11788
631/348-0282
FAX 631/348-0279
Info@Mason-Ind.com

2101 W. Crescent Ave., Suite D
Anaheim, CA 92801
714/535-2727
FAX 714/535-5738
Info@MasonAnaheim.com

www.Mason-Ind.com

JOB NAME _____
CUSTOMER _____
CUSTOMER P.O. _____
MASON M.I. _____
DWG. NO. _____

Z-1011

All-Directional Seismic Snubber Sizes 5000-25000

Z-1011- 5000 thru 25000

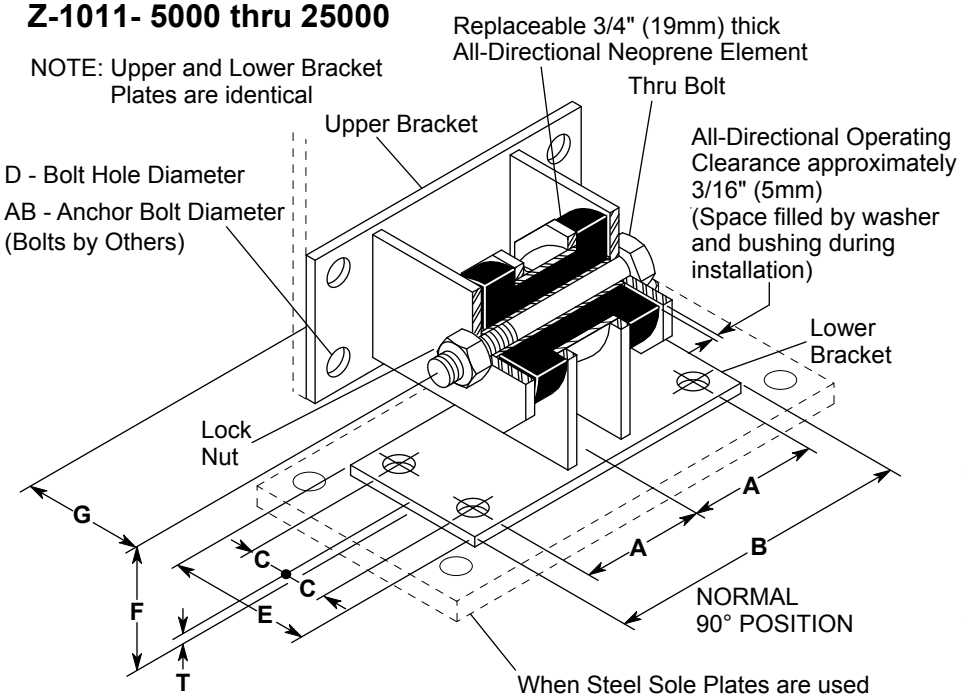

When Steel Sole Plates are used level and anchor Sole Plates properly to concrete. Snubber Base Plate may be bolted or welded to Sole Plate.

ALTERNATE 180° POSITION

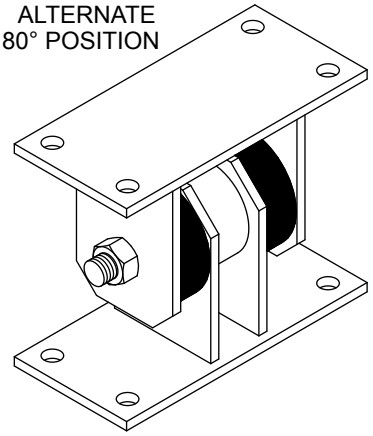

INSTALLATION INSTRUCTIONS:

1. Snubbers are inactive during normal operation and clearance must be maintained.
2. To maintain clearances around isolation bushing, unit is furnished with spacer washers and bushing.
   These are to remain in the unit during installation only.
3. If snubbers are installed on equipment such as blowers or pumps with flexible connections that move and remain in a different position during operation, final positioning and adjustment of snubbers must be made with equipment in operation.
4. Use shims at brackets as required so that units are installed without applying pressure on spacer washers or bushing.
5. After units are installed, remove spacer washers and bushing as follows:

a. Remove lock nut from thru-bolt and remove thru-bolt.
b. Remove anchor bolts from one bracket. If bracket was shimmed, note shim position.
c. Remove bracket and remove spacer washers and bushing.
d. Reinstall bracket and thru-bolt. If shims were used, shim as before.

TYPE Z-1011 LOAD RATINGS and DIMENSIONS

	Size	Load Rating	A	AB	B	C	D	E	F	G	T
U.S.A Britis h (lbs. & inches)	5000	5000	5	5/8	12 1/2	2 1/2	3/4	7	5	5	1/2
	13000	13000	6	1	14 1/2	2 3/4	1 1/8	8	5 3/4	5 3/4	3/4
	25000	25000	6 3/8	1 1/4	16	4 1/8	1 3/8	11	8	8	1
Metric (kgs. & mm)	5000	2273	127	16	318	64	19	178	127	127	13
	13000	5909	152	25	368	70	29	203	146	146	19
	25000	11364	162	32	406	105	35	279	203	203	25