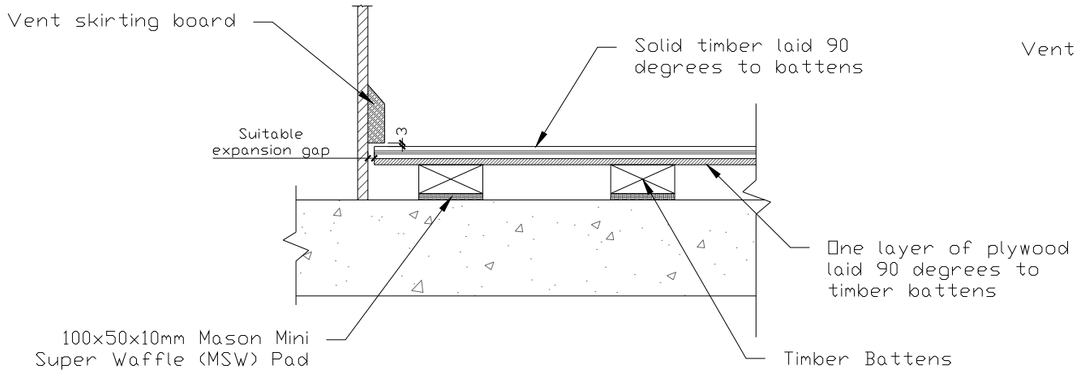

SF 01 TYPICAL DETAIL - SPORTS FLOOR

NTS - Timber Battens on MSW Pads

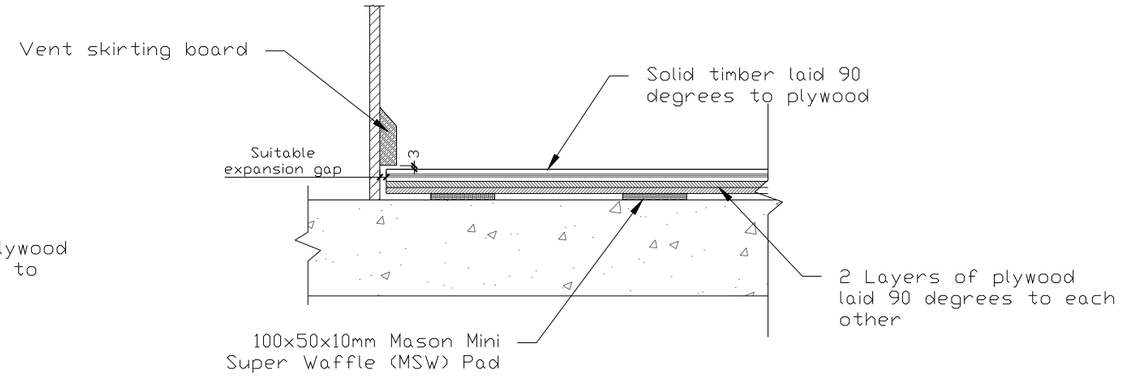

SF 02 TYPICAL DETAIL - SPORTS FLOOR

NTS - Floor Directly Laid on MSW Pads

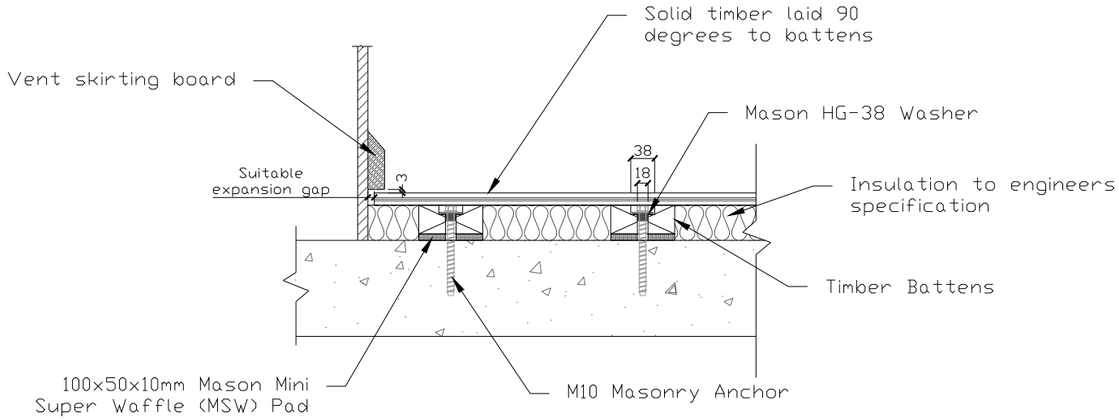

SF 03 TYPICAL DETAIL - SPORTS FLOOR

NTS - Insulated Isolated Floor on MSW Pads

Notes:

NOTES

1. THIS DRAWING MAY NOT BE REPRODUCED IN WHOLE OR PART OR USED FOR THE MANUFACTURE OF ANY ARTICLE WITHOUT THE EXPRESS PERMISSION OF THE COPYRIGHT HOLDERS.
2. WORK TO FIGURED DIMENSIONS ONLY.
3. THIS DRAWING IS TO BE READ IN CONJUNCTION WITH ALL RELEVANT ARCHITECT'S, SERVICE ENGINEER'S DRAWINGS AND SPECIFICATIONS.

REV:	DESCRIPTION:	BY:	DATE:
A	DETAILS	CY	30/07/2020

STATUS: TYPICAL DETAILS

Mason Mercer
30 Chaffey Street
Thomastown, VIC 3074
Australia
Email: info@masonmercer.com.au
Phone: 1800-0-MASON
www.masonmercer.com.au

SITE: Typical Details

TITLE: SPORTS FLOOR ISOLATION

SCALE AT A1:	DATE:	DRAWN:	CHECKED:
NTS	30/07/2020	CY	JW

PROJECT NO:	DRAWING NO:	REVISION:
NA	TYP-06	A